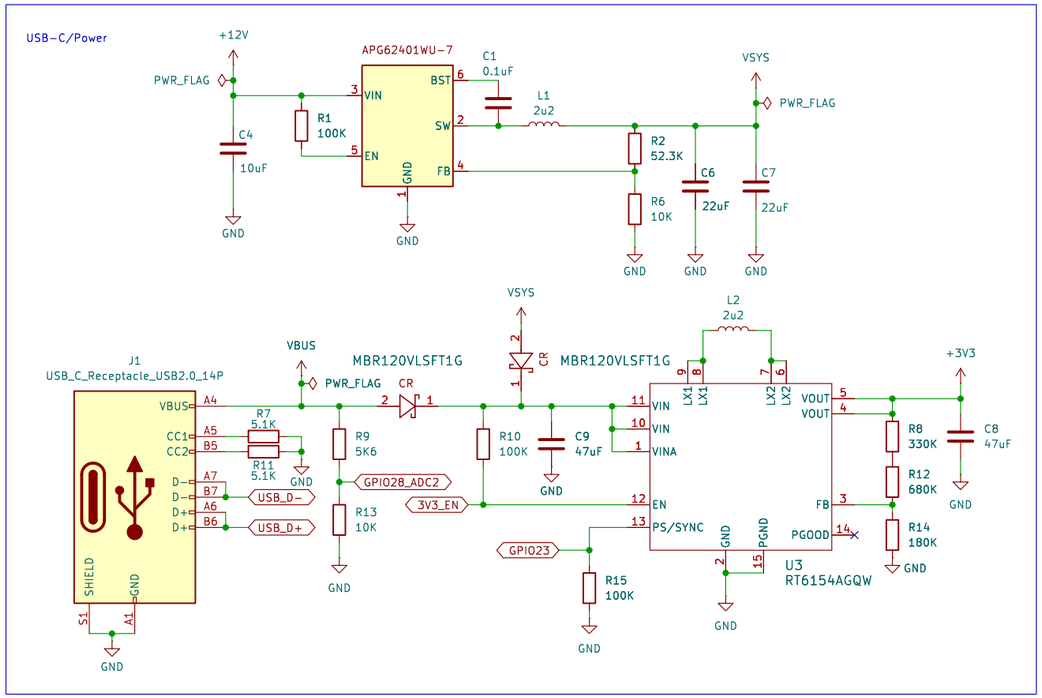

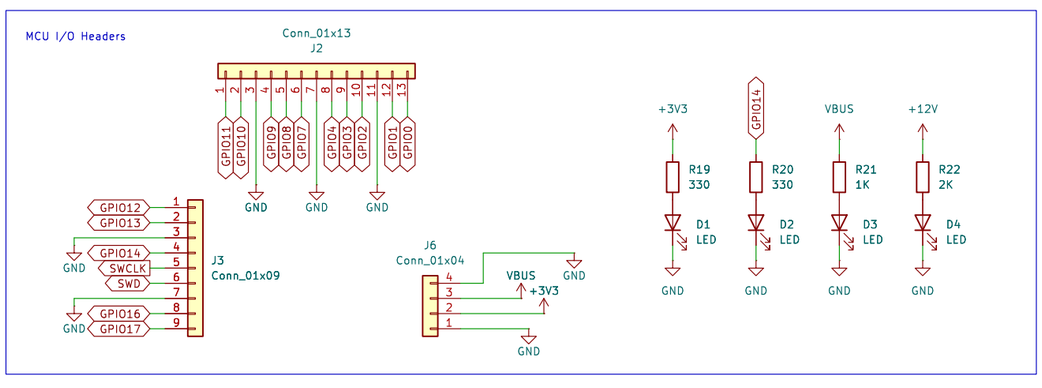

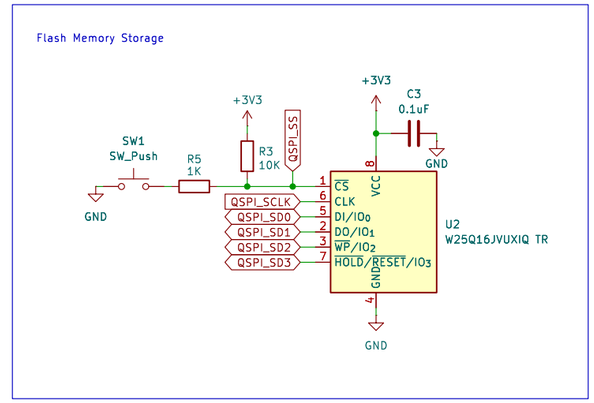

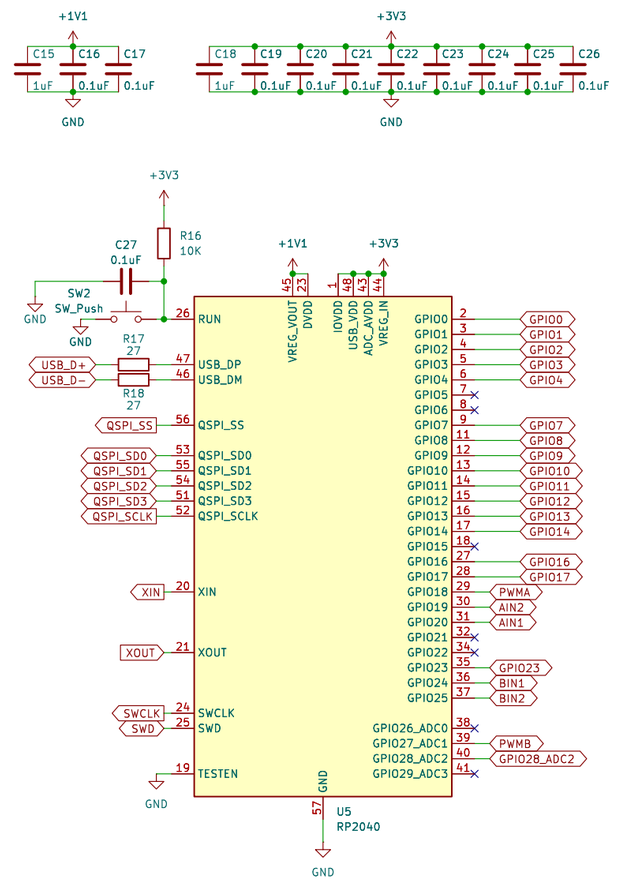

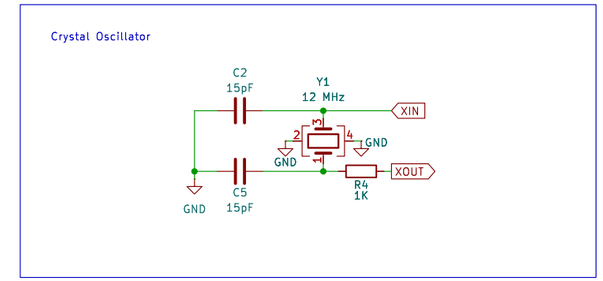

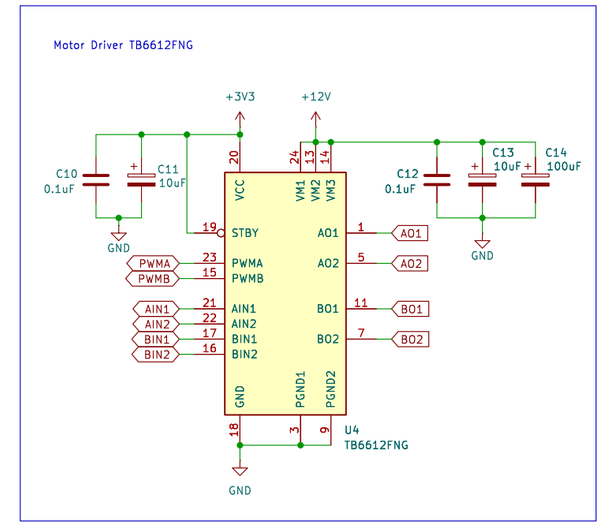

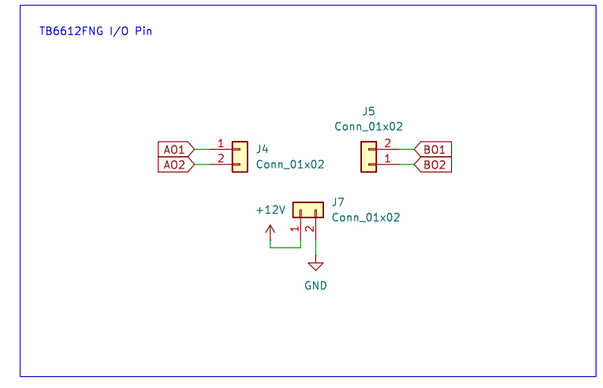

Sheet: /
File: RC Car Module.kicad_sch

Title: Rukus Remote-Controlled Module

Size: User	Date:	Rev:
KiCad E.D.A. 9.0.6		Id: 1/1